BaBar Computing

Stephen J. Gowdy
BaBar Computing Coordinator
SLAC

21st October 2002

Second Large Scale Cluster Computing Workshop

Overview

- Distributed [illegible]on
- Computing Site
- [illegible]duction
- [illegible]is
- [illegible]RID

Distributed Collaboration

Distributed Collaboration (Cont.)

- 560 Collabo 76 institutions in 9 countries
  - Important to a emote development
- & CVS
  - ed tools to allow remote collaboration
- ols & SiteConfig
  - allow software to run at any site
- At last count (2 years ago) over 300 collaborations had contributed to software

Computing Sites

- Multi-tier sy
  - Tier-As: larg ntration of resources
  - Tier-Bs: not ob red
  - r-Cs: small site laptops
- 4 Tier-As
- tes
  - Could have a few people's laptops

SLAC

- Main compu
  - Complete da on tape
  - Till 1.5 years ag production
  - users require S AC account
- rdware
  - 0MHz SparcIIIs
  - 512 VA RedHat7.2 Dual 866MHz P-IIIs
  - 256 (+128) Rackable RedHat7.2 Dual 1.4GHz P-IIIs

Sun T1s

VA 1220s

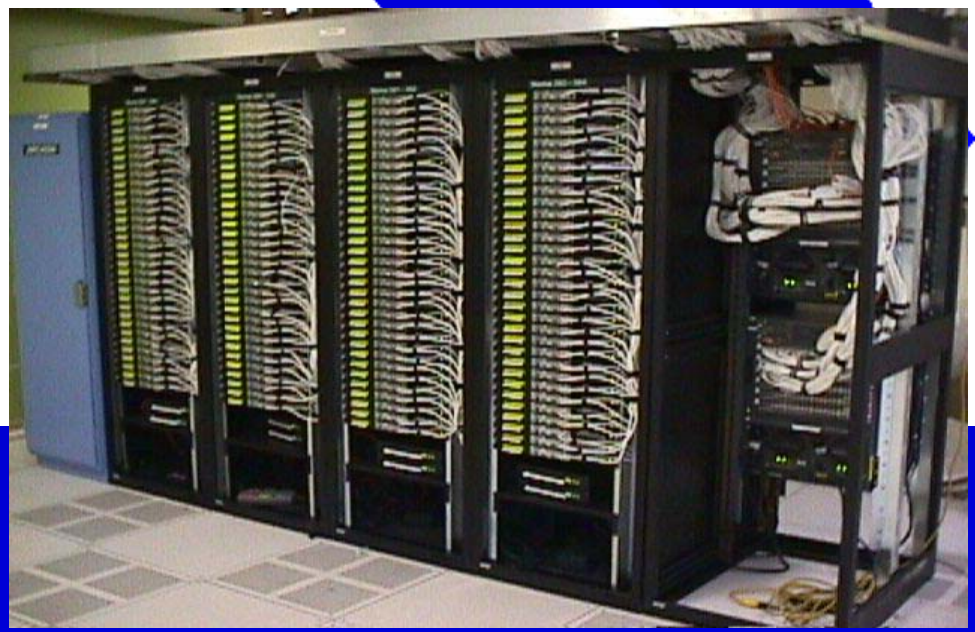

Rackables (back-to-back)

E420R + T3 disks

Journal & Lock

SLAC (Cont.)

- Server hardw
  - ~100 small s lock, journal etc)
    - Sun Solaris8 MHz SparcIIIs
    - 100Mb Etherne
  - ta servers (2 or 4 CPUs with 1-2TB
    -
- HPSS used to manage tertiary storage
- Switched network

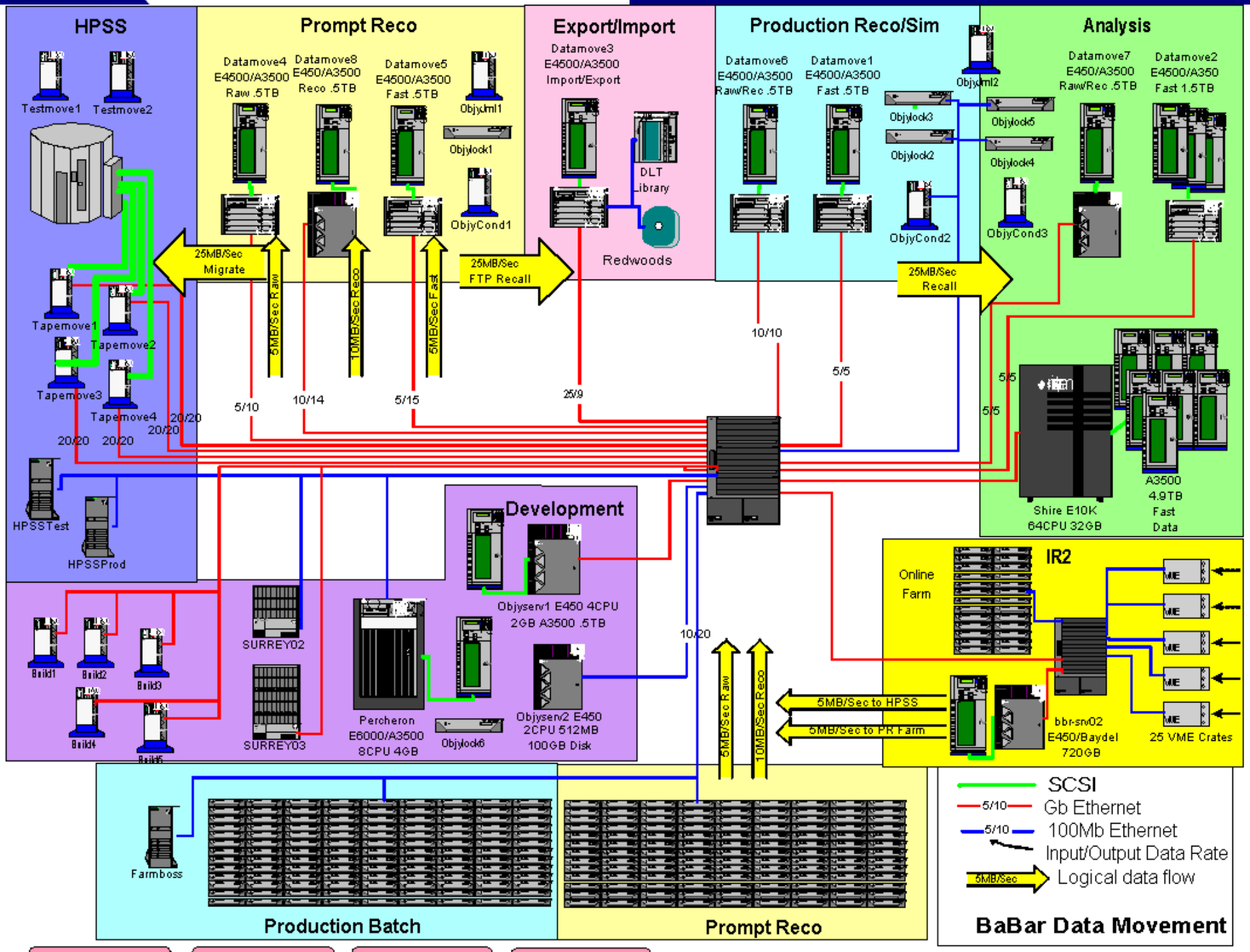
HPSS
Testmove1
Testmove2
Tapemove1
Tapemove2
Tapemove3
Tapemove4
HPSSTest
HPSSProd
Prompt Reco
Datamove4 E4500/A3500 Raw .5TB
Datamove8 E450/A3500 Reco .5TB
Datamove5 E4500/A3500 Fast .5TB
Objyjml1
Objylock1
ObjyCond1
Export/Import
Datamove3 E4500/A3500 Import/Export
DLT library
Redwoods
Production Reco/Sim
Datamove6 E4500/A3500 Raw/Rec .5TB
Datamove1 E4500/A3500 Fast .5TB
Objyjml2
Objylock3
Objylock2
ObjyCond2
Analysis
Datamove7 E450/A3500 Raw/Rec .5TB
Datamove2 E4500/A350 Fast 1.5TB
Objylock5
Objylock4
ObjyCond3
25MB/Sec Migrate
5MB/Sec Raw
10MB/Sec Reco
5MB/Sec Fast
25MB/Sec FTP Recall
25MB/Sec Recall
5/10
10/14
5/15
25/9
10/10
5/5
20/20
Shire E10K 64CPU 32GB
A3500 4.9TB Fast Data
Development
Objyserv1 E450 4CPU 2GB A3500 .5TB
Objyserv2 E450 2CPU 512MB 100GB Disk
Percheron E6000/A3500 8CPU 4GB
Objylock6
SURREY02
SURREY03
Build1
Build2
Build3
Build4
Build5
10/20
5MB/Sec Raw
10MB/Sec Reco
5MB/Sec to HPSS
5MB/Sec to PR Farm
Online Farm
IR2
bbr-srv02 E450/Baydel 720GB
25 VME Crates
Farmboss
Production Batch
Prompt Reco
SCSI
Gb Ethernet
100Mb Ethernet
Input/Output Data Rate
Logical data flow
BaBar Data Movement
Overview
Core
Farm
BaBar
DATE: 7/8/99 TIME: 2:29:12 PM PG: 4 OF 4 PGS

IN2P3

- First externa entre
  - Started earl
- ared facility w + experiments
- ar allocation (v es when needed)
  - ata servers (22 B disk)
    - ently ll Su machines
    - IPSS to stage data
  - ~100 IBM eServers Dual P-IIIs clients
    - Mix of 750MHz and 1.2GHz
  - ~40 Sun Solaris8 clients

IBM Linux clients

Sun data servers

INFN/Padova

- 120 IBM eS 1.26GHz P-IIIs clients
  - 100Mbit Eth
- inux servers w TB each for production
- of disk in total
- e library
  - 80TB of Xtc files
    - Output from online system
    - Will be complete off site backup

IBM Clients

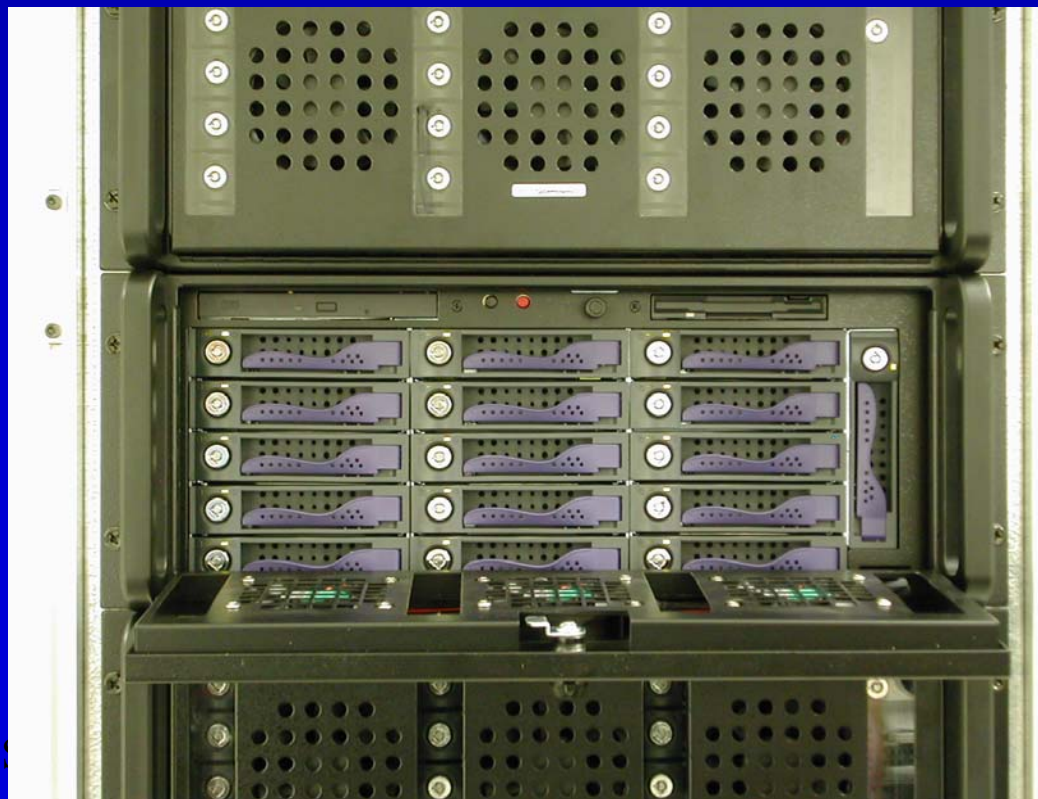

EIDE 3Ware RAID

RAL

- 104 RedHat [illegible] 4GHz P-IIIs
  - In addition s[illegible] farm of 156 slower [illegible]machines
  - [illegible]0Mb Ethernet
- [illegible] disk utilising [illegible]DE RAID arrays
  - [illegible]ig[illegible] Et[illegible]net

Linux Clients

IDE disk array

Production

- Data Recons
  - Prompt Rec on
  - Reprocessing
- lation Producti
- ing
- e dat form production
  - is BaBar Data Store/Objectivity
  - Format for university distribution is Kanga/ROOT

Data Reconstruction

- Calibrations data
- Prior model use ng
  libraries
  - e defined the
    ants for
    rucin the next
- tep

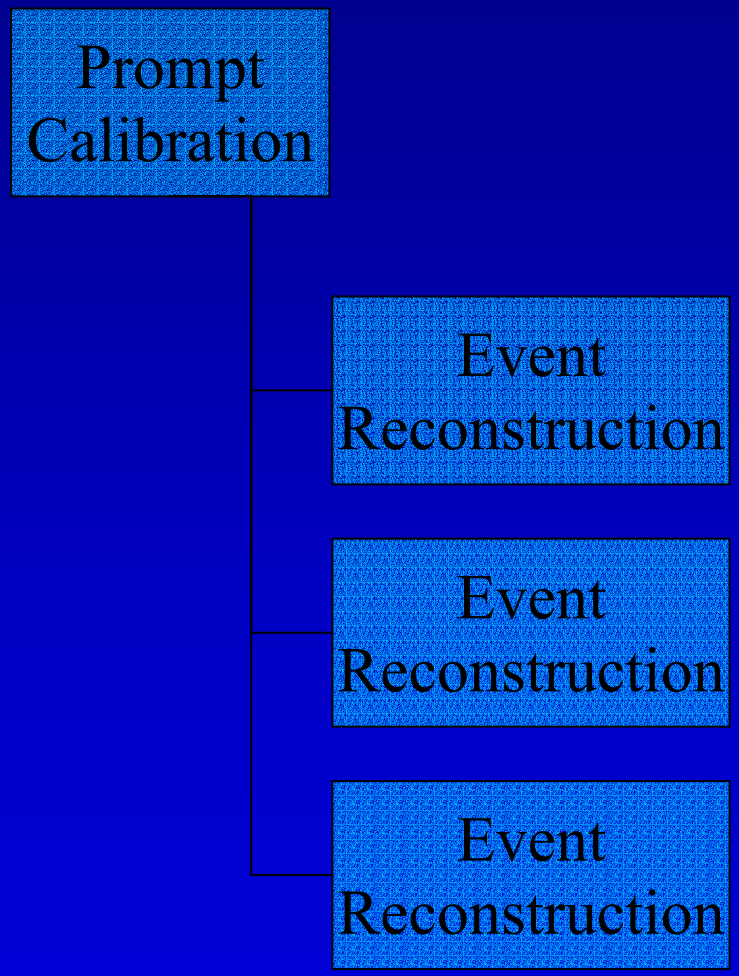

Reprocessing

- Started two w
- Reprocesses full
  - Should finish in ry
- npt Calibration
  - C Farm
- onstruction
  - ado Farm
- C
  - Second feeds two SLAC ER farms

Prompt Reconstruction

- PEP-II resta
  November
  - Expect collisio
    ithin week
- ith two ER farms
-
  - When reprocessing
    done

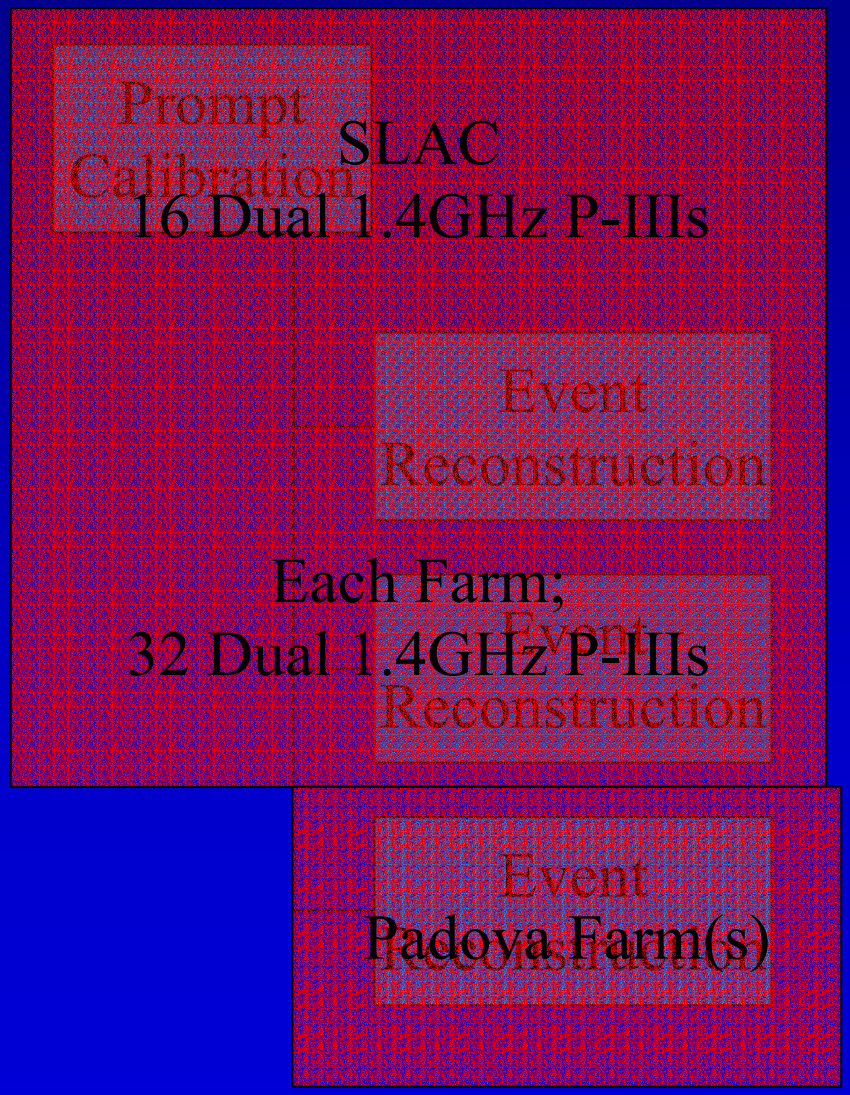

Simulation Production

- *Largly Distri*
  - *20 sites prod* *e Carlo*
  - *48 Dual 866M* *s at SLAC*
  - *Home grown syste* *centrally manage, ProdTools*
- *towards larger* *tistics*
  - *ate ~1σ continuum/taus*
  - *sor*
  -
- *Utilise under used cycles on analysis and data production farms*
  - *Required increase in memory on client nodes (2GB)*

Analysis

- Three of the e currently provide analysis capac
  - SLAC and IN2 ovides Objectivity based ta
  - provides ROOT based data
- RA & IN P3 for analysis
- ecINT 95s

BaBar GRID

- Three app… …evelopment
  - Simulatio… …on
    - Currently … …FTEs for production
  - Analysis
    - Allow better … …of world wide resources
    - Allow users to … …ork interactively where … …y wish
      - …urrently use… …need to login to Tier-A … …r resources
  - Data Distribution
    - User can initiate request from their site and athenticate to nearest resource with data

Conclusions

- BaBar deve[illegible]s been distributed since inception
- [illegible]ring last two y[illegible]noved to use distributed [illegible]puting resource[illegible]
- [illegible] towards using Grid Techonolgy to add [illegible]cy