ATLAS SIMULATION: STATUS, PERFORMANCE, AND FUTURE PLANS

Fred Luehring

19/10/00

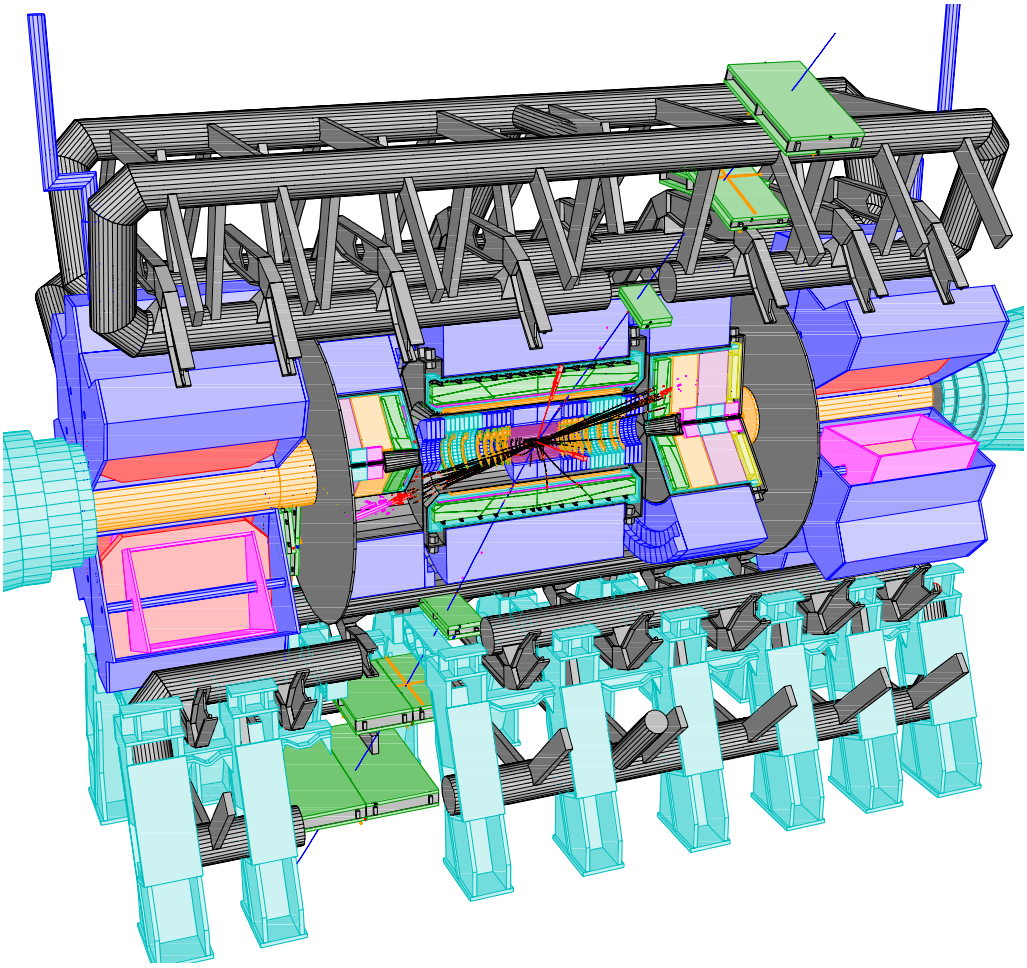

ATLAS

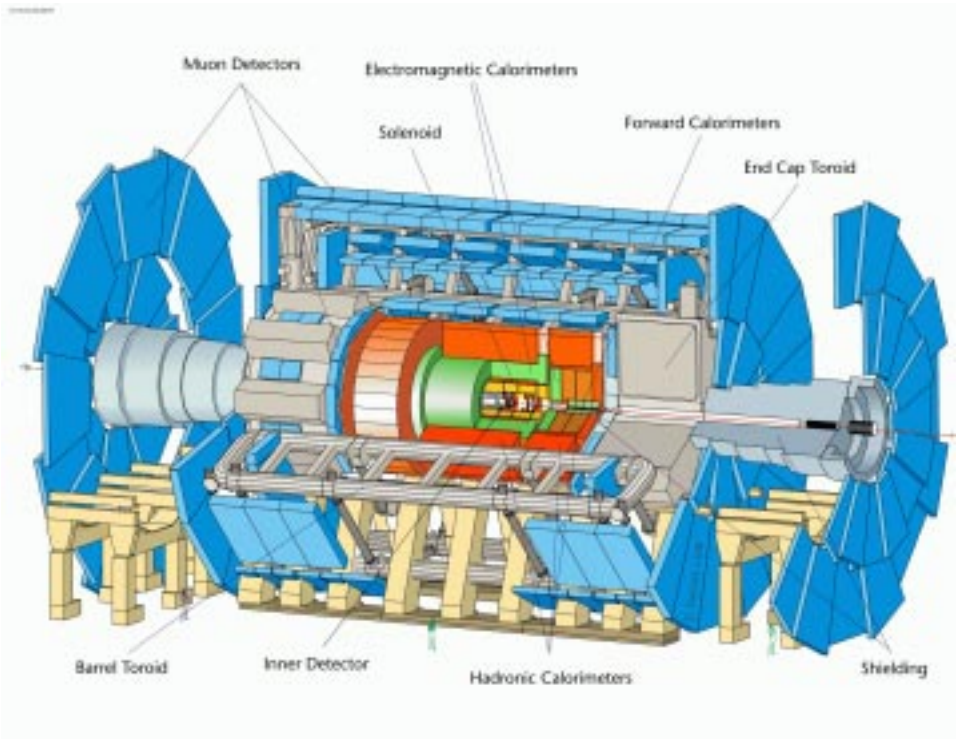

Atlas is one of two large, general purpose experiments being constructed for the Large Hadronic Collider (LHC) at CERN. ATLAS has ~1800 participants from ~170 institutes all over the world working on the detector.

The ATLAS consists of a number of subdetectors:

1. **Charged particle tracking in a 2.0 T magnetic field:**
   - **Three layers of silicon pixel detectors**
   - **Four layers of silicon strip detectors**
   - **A large straw drift tube system**
2. **LAr electromagnetic calorimetry.**
3. **Iron-Scintillator hadronic calorimetry.**
4. **A large air core toroidal muon detection system.**

The proposals that became ATLAS were first begun over 10 years ago (i.e when dinosaurs still roamed the earth).

Simulation History

History (pre-GEANT4):

- **The original simulations were written in Fortran using GEANT3 and run on IBM main-frames and DEC VAXes.**
- **The code management was the CERN tool CMZ.**
- **The memory management for GEANT3 and the original ATLAS software was Zebra.**
- **No database was used and many parameters were coded directly into the software.**
- **The ATLAS GEANT3 simulation was developed by a small group of experts. Later many people contributed code to the official version as the detector design advanced. In 1995 the simulation was split into two parallel paths:**

  Atlsim - the interactive version that included all menus of GEANT3 & PAW and a dynamic linking mechanism.

  Dice - a batch-oriented version that included models of all parts of ATLAS in a large executable, physics event generators, and used 80 column "datacards" as input.

GEANT3 Work

The GEANT3 code was used to generate millions of events that were used for critical purposes like making this plot demonstrating the ATLAS Higgs reach for the ATLAS Physics Technical Design Report (TDR):

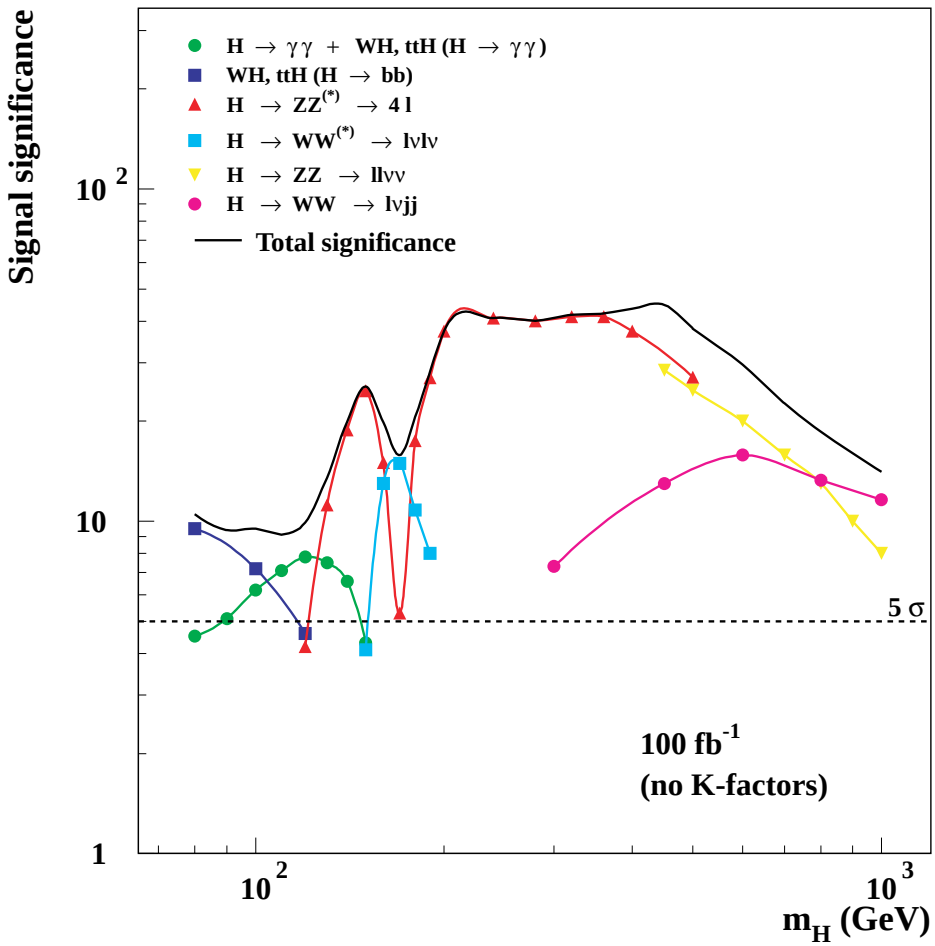

The GEANT3 code will be used for simulations needed by the Trigger DAQ TDR but soon after that GEANT3 will be phased-out and replaced with GEANT4.

Performance

Since our GEANT4 simulation is still under development, the performance shown is for our GEANT3 simulation which included about 16 million volumes. We expect GEANT4 to be similar.

The CPU time consumption is usually dominated by the event-simulation time (particle tracking and hit calculation):

Table 2-2 CPU time needed for simulation of the ATLAS detector with GEANT 3.21. The timings, given in SPECint95 seconds for single tracks and for minimum-bias events, were obtained from the CPU time on a Pentium II processor at 400 MHz and scaled by the estimated SPECint95 rating of 10.3.

Event type	Timing in Inner Detector	Timing in Calorimeters
Single track (electron of 10 GeV energy)	6	100
Single track (pion of 10 GeV energy)	4	60
Minimum-bias event ($\lvert \eta \rvert < 3.0$)	190	2500

The detector-response calculation time can become large when simulating the effect of the background minimum bias events that accompany each event of interest which is done as part of the detector response. The bunches in LHC cross every 25 ns with an average of 23 interactions/crossing at design luminosity which means summing lots of hits.

GEANT4 and OO

With GEANT4's arrival ATLAS joined the GEANT4 collaboration and the simulation is being completely rewritten in OO code.

This is a BIG job.

Most of the new code is c++ but currently "wrapped" Fortran 77 is allowed. We are also expecting that much of the graphics will probably be done is Java.

Before we can use GEANT4 for large scale production it is necessary to validate that it correctly simulates nuts-and-bolts physics such as ionization, pair production, hadronic interactions, etc.

At the same time we are also working on a global design for storing information about:

1. **The geometrical dimensions of the detector.**
2. **The materials of the detector.**
3. **The hits (stores location of and energy of simulated particle track hits).**
4. **The digitizations (simulated electronic digital readout of the hits).**

The completion of this work is partially dependent on making a decision on what database will be used.

Testbeam in GEANT4

Our first job is to validate the physics in GEANT4 by simulating the subdetector testbeam setups. Here is the testbeam setup for the Atlas straw tube tracker:

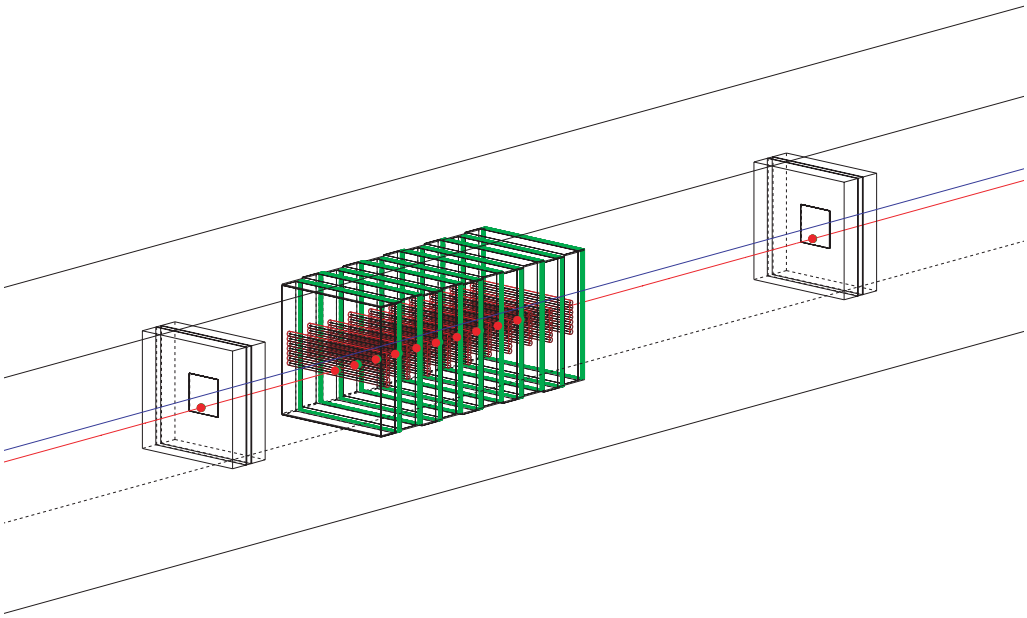

```
O.x      =  0
O.y      =  -2.35391
O.z      =  3606
camera_d =  449496
polar    =  44
azimuthal=  21
focal_d  =  530.873971
e_2d     =  1e-07
e_3d     =  0.001
```

This setup is used to test radiator material for generating Transition Radiation (TR) X-Rays.

GEANT4 Physics

We are carefully comparing GEANT4 to both GEANT3 and data. Here are results for ionization energy deposition in the gas mixture in the straw tubes tracking system (a test of the GEANT4 implementation of the Bethe-Bloch formula):

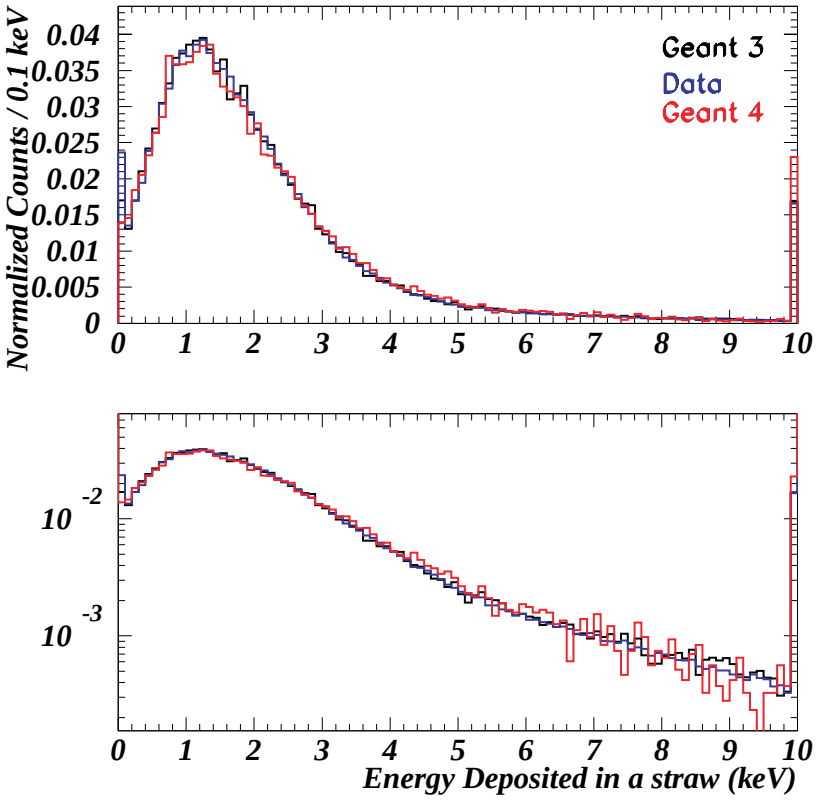

This data is needed to understand the TR photon production in the straw tube tracker.

Atlas GEANT4 Geometry

We are working on a method to describe the geometrical dimensions and materials in a software-neutral way. This is know as the ATLAS generic detector description (AGDD).

Currently we are using XML for the description because it provides a simple syntax, portability, and the possibility to use commercial tools such as editors and browsers.

Example: XML implementation

```
<?xml version="1.0"?>
<!DOCTYPE AGDD SYSTEM "AGDD_1.04.dtd">

<AGDD DTD_version="v4">

<!--  Workshop example file
      **********************
-->
<section name       = "WK"
         version    = "1.0"
         date       = "Wed Oct 27"
         author     = "Detector Description group"
         top_volume = "ATLAS"
         DTD_version= "v4"     >


<tubs name="WK_tube" material="Aluminum" Rio_Z="0. 15. 1000." />

<composition name="WK_layer" >
     <mposZ volume="WK_tube" ncopy="10" dZ="30." rot="0 90 0" />
</composition>

<composition name="WK_multilayer" >
     <posXYZ volume="WK_layer" X_Y_Z=" 0 0 0" />
     <posXYZ volume="WK_layer" X_Y_Z=" 0 30 0" />
     <posXYZ volume="WK_layer" X_Y_Z=" 0 60 0" />
     <posXYZ volume="WK_layer" X_Y_Z=" 0 90 0" />
</composition>

<composition name="ATLAS" >
     <posXYZ volume="WK_multilayer" />
</composition>

</section>
</AGDD>
```

AGDD Header, version of DTD

Section: sub-detector + author + version

Creation solid: tube

Various positioning of volumes

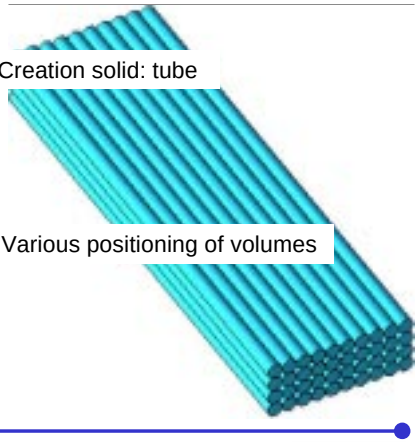

The generic description is independent of GEANT4.

AGDD

We hope that the information used by AGDD can be derived in a semi-automatic way from the detector engineering database and that all offline software can share this same underlying database to ensure that there is single, controlled data source.

Tools will need to be developed so that programs using AGDD should receive information at an appropriate level of detail and granularity. The GEANT4 simulation will need more detail than the reconstruction or fast simulation.

The design of the database storing the detector description will need to track changes in the detector over time. It is foreseen to run the ATLAS for 10-15 years and certainly parts of the detector will be changed over such a long time span.

The Near Future

We have many jobs which urgently need to be done. In the next 1.5 years our major goals are:

1. **Completing the comparison of the GEANT4 physics with our testbeam data.**

   We don't want to run large Monte Carlo productions in GEANT4 until we are certain that the results will be valid.

2. **Designing and implementing a simulation framework.**

   We need a framework that facilities rapid code development by things like dynamic linking, debugging tools, and scripting facilities.

3. **Getting the main parts of the ATLAS detector described in GEANT4.**

   Obviously needed to make large productions...

4. **Designing and implementing the hits and digitizations.**

   This is a critical item because it drives the storage requirement for generated events as well having a direct effect on the amount of computer power needed.

5. **Doing the first two Mock Data Challenges.**

   MDC0 is 100k events to test the data flow (starts 1/11/01).

   MDC1 is 1 TB or 0.1% of a years data (starts 2/1/02).